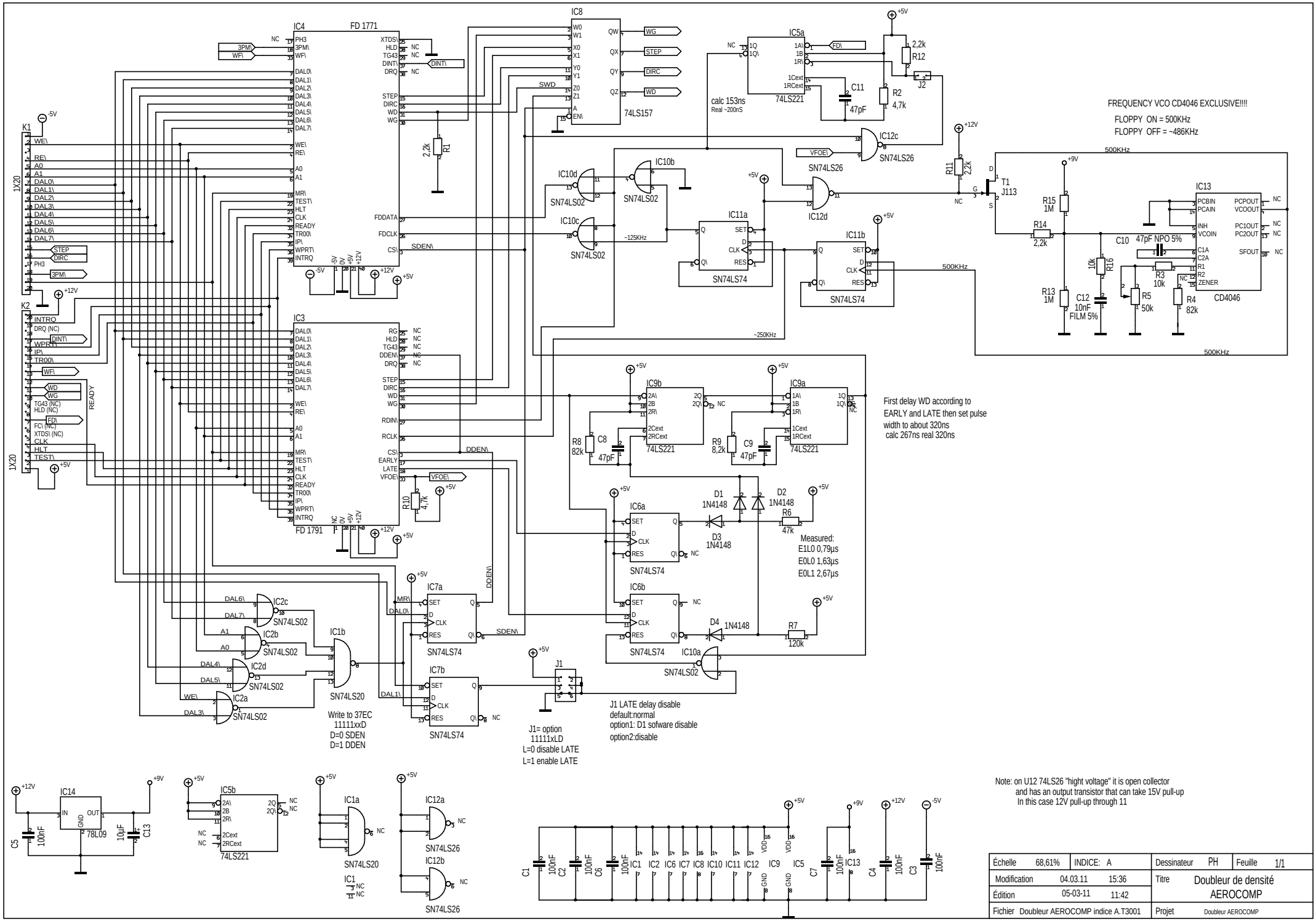
IC4
FD 1771
IC3
FD 1791
IC8
74LS157
IC5a
74LS221
IC12c
SN74LS26
IC12d
IC10b
IC10d
IC10c
SN74LS02
IC11a
IC11b
SN74LS74
~125KHz
~250KHz
500KHz
FREQUENCY VCO CD4046 EXCLUSIVE!!!!
FLOPPY ON = 500KHz
FLOPPY OFF = ~486KHz
IC13
CD4046
T1
J113
IC9b
IC9a
IC6a
IC6b
IC7a
IC7b
IC2c
IC2b
IC2d
IC2a
IC1b
SN74LS20
IC10a
First delay WD according to
EARLY and LATE then set pulse
width to about 320ns
calc 267ns real 320ns
Measured:
E1L0 0,79µs
E0L0 1,63µs
E0L1 2,67µs
Write to 37EC
11111xxD
D=0 SDEN
D=1 DDEN
J1= option
11111xLD
L=0 disable LATE
L=1 enable LATE
J1 LATE delay disable
default:normal
option1: D1 sofware disable
option2:disable
IC14
78L09
IC5b
IC1a
IC12a
IC12b
Note: on U12 74LS26 "hight voltage" it is open collector
and has an output transistor that can take 15V pull-up
In this case 12V pull-up through 11
Échelle 68,61%
INDICE: A
Dessinateur PH
Feuille 1/1
Modification 04.03.11 15:36
Titre Doubleur de densité AEROCOMP
Édition 05-03-11 11:42
Fichier Doubleur AEROCOMP indice A.T3001
Projet Doubleur AEROCOMP